City of Loveland

Submittal Check List
New Detached / Attached Single Family / Duplex

DEVELOPMENT CENTER
Planning + Permitting + Building

- ☐ **Building Permit Application** - http://www.cityofloveland.org/modules/showdocument.aspx?documentid=2714
  - A completed application includes a signature as well as all line items addressed (if an item is not applicable please note as such), and a clear work description.
- ☐ **Residential Lot Stormwater Quality Permit Application** - http://www.cityofloveland.org/modules/showdocument.aspx?documentid=15623
  - Guidelines can be found here: http://www.cityofloveland.org/departments/public-works/stormwater/stormwater-development-guidelines
- ☐ **Site Plan/ Grading Plan -** http://www.cityofloveland.org/modules/showdocument.aspx?documentid=16133
- ☐ **Building Elevations**
- ☐ **Roof Framing Plan or Truss Pack and Truss Layout - Must be Sealed by a professional Engineer**
  - Show size, spacing, species and grade of lumber to be used for floor joists. All beam and header sizes are to be noted on the plans
- ☐ **Floor Framing Plan - Must be Sealed by a professional Engineer**
  - Show size, spacing, species and grade of lumber to be used for floor joist
- ☐ **Footing and Foundation Drawings**
  - Must be signed and sealed by a Professional Engineer
- ☐ **Braced Wall Details as per R106.1.1**
  - Must be signed and sealed by a Professional Engineer
- ☐ **Frame Section**
  - Identify cross-section submitted with plan (foundation section is not adequate.) Must show from bottom of footing to top of roofline. Identify framing and insulation details.
- ☐ **Stair Section**
  - Show cross section details including rise /run stair openings handrails landings etc.
- ☐ **Detail Sections**
  - Critical construction points or special structural items such as decks, porches, or retaining walls over four feet
- ☐ **Building Construction Plans**
  - Must be designed to the current design criteria http://www.cityofloveland.org/index.aspx?page=458
  - Must be stamped by Architect (only if it is master planned)
  - Further details on the construction plans can be found at http://www.cityofloveland.org/modules/showdocument.aspx?documentid=16133
- ☐ **List floor protection method on plans and application per R501.3**
- ☐ **Energy Code Compliance Forms**
  - Performance Path should include Energy Code 3rd party report, heating and cooling load calculations and duct design
  - Prescriptive Path should include heating and cooling load calculations and duct design (Res Check is an optional trade off)
  - R-values must be shown on architectural plans
- ☐ **Water receipt** - if receiving water from Little Thompson Water District or Fort Collins-Loveland Water District and not from the City of Loveland.
- ☐ **Architectural Review Committee Letter** - signed and completed (if required by subdivision)
- ☐ **Electric Service Worksheet (attached)**

Other Necessary Documents

New Detached / Attached Single Family / Duplex

☐ **Foundation Setback and Elevation Certification (attached)** -

- A completed certification is required once construction begins. Building Inspectors will pick this certificate up **on-site** when the Footing/Foundation/UFER inspection has been scheduled.

☐ **Sprinkler Installation Affidavit (attached)** -

- If the method of fire protection for the floors is P2904 automatic fire sprinklers, then this affidavit is required to be filled out by the licensed Plumbing Contractor. Building Inspectors will pick up the affidavit on-site when the Fire Sprinkler Affidavit inspection has been scheduled.

☐ **Energy Compliance / Blower Door Report -**

- Documentation must be provided at final inspection regarding the energy testing for the home (if energy compliance method is NOT prescriptive).

☐ **Water/Waste Water Service Installation Report (attached) -**

- Documentation regarding the installation must be provided at final inspection.

☐ **Residential Certification of Lot Grading and Structure Elevation -**

- A completed certification is required during final inspection. Building Inspectors will pick up this certificate **on-site** when the Final Grade Cert inspection has been scheduled.
- If some circumstance does not allow you to meet the the required elevations, a **Residential Alternate Certification of Lot Grading and Structure Elevation** may be submitted.

City of Loveland

Building Permit Site Plan Grading and Drainage Requirements

DEVELOPMENT CENTER
Planning + Permitting + Building

Please show the following on the site plan:

- Lot lines
- Existing and proposed easements
- Street names
- North Arrow
- Scale
- Proposed and existing structure locations clearly labeled on the property
- Proposed and existing driveways, patios, sidewalks, etc.
- Proposed spot elevations located at all lot corners
- Show the location and elevations of all defined 100-year floodplains that traverse the property
- Existing drainage facilities, structures, swales, irrigation facilities and sizes located on the lot
- Proposed flow direction using arrows showing positive drainage away from all structure foundation and to the street or to an approved discharge facility
- Proposed flow direction using arrows showing positive drainage away from all structure foundation and to the street or to an approved discharge facility
- Top of foundation (TOF) elevation for all on-site structures
- Minimum opening elevation (MOE) for all on-site structures - the MOE is the lowest opening in the structure in which surface water can enter
- Finished grades spot elevations at all corners of the on-site structures

Additional Grading criteria for properties that are not designed in an approved subdivision grading plan:

- A minimum 2.0% slope on all lot lines and within all swales
- The TOF and MOE a minimum of 1 foot above the 100-year water surface in streets, open channels, ditches, swales, or other drainage facilities, and 1. 5 feet above all 100-year floodplains
- Finished grades are shown to be 6 inches lower than the top of foundation elevation
- The ground should slope away from all foundation walls at a minimum 5% for a distance up to 10 feet away from foundation unless otherwise specified in a geotechnical report specific to the structure or on the approved subdivision grading plan
- Show positive drainage away from house an doff the lot to a street or approved drainage facility without negatively affecting neighboring properties
- Any proposed storm sewers and culverts - shall be labeled with upstream and downstream invert elevations, manhole rim elevations, pipe material, pipe length, and pipe slope, in order to be properly constructed per the City of Loveland Stormwater Standards

- Any proposed swales, open channels, cross-pan, etc. that are designed shall be labeled with flowline elevations, side slopes, longitudinal slopes and bottom widths i order to be properly constructed
- Spot elevations and grades do not cause ponding on or off site
- Spot elevations at upstream ends of proposed swales
- Slopes of all proposed swales are labeled
- Downspouts are directed away from adjacent lots and will not flood window wells, foundations, etc. on the lot or on adjacent lots
- Landscaping berms and features do not block the flow of water from drainage away from the foundation or off of the lot

City of Loveland Building
Permit Application
Residential New Construction
PERMIT NUMBER:

Application Type: New Detached Single Family
Address: _____
Subdivision: _____ Block: _____ Lot: _____
Owner Name: _____ Address: _____
Owner Phone: _____ Owner Email: _____
Contact Name: _____ Business: _____
Contact Phone: _____ Contact Email: _____
General Contractor Business Name: _____ City License # _____
General Contractor Name: _____ Valuation: _____
Electrical Contractor: _____ Sub-valuation: _____
Mechanical Contractor: _____ Sub-valuation: _____
Plumbing Contractor: _____ Sub-valuation: _____

Number of Bathrooms (1/2)	
Number of Bathrooms (3/4)	
Number of Bathrooms (Full)	
Number of Bedrooms-Basement Only	
Number of Bedrooms-Excluding Basement	
Number of Dwelling Units	
Number of Stories	
Number of 0.75in Water Meters	
1st Sq Ft	
2nd Sq Ft	
Basement Sq Ft (Finished)	
Basement Sq Ft (UnFinished)	
Structure Height (Ft)	
Sq Ft of Covered Deck Area	
Sq Ft of Uncovered Deck Area	
Electric Service Size Amps	
Electric Service Provider?	
What is the Energy Code Compliance	Performance
*If Prescriptive indicate R-Value of insulation	
Number of Fireplaces/Pits-Gas	
Number of Fireplaces/Stoves-Wood	
Fire Protection of Floors Method	No-Burn coating
Fully Sprinklered Type?	NFPA 13
Garage Sq Ft	
Garden Level Sq Ft	
Lot Size in Sq Ft	
Master Plan Number If Applicable	

Master Plan Name/Elevation	

Sq Ft of Patio Covered Area	
Sq Ft of Uncovered Patio Area	
Sq Ft of Covered Porch Area	
Sq Ft of Uncovered Porch Area	
Air Conditioning?	Yes
What is the Type of Heat?	Electric
Water Service Provider?	City of Loveland
Garage Type (ex: 2-car attached)	
Crawl Space Sf Ft	
Total New Square Footage of Project	
Affordable Housing?	
Work description:	

I certify this application is correct. I agree to perform the work described according to plans and specifications submitted and approved. I agree to comply with all city ordinances, state laws and building codes. Additionally, **I UNDERSTAND THAT I AM RESPONSIBLE FOR ANY FEES OR EXPENSES INCURRED FOR PLAN REVIEW, PERMITS, INSPECTIONS AND OTHER FEES ASSOCIATED WITH THIS APPLICATION. FAILURE TO PICK UP AND PAY FOR THIS PERMIT WITHIN 90 DAYS OF APPROVAL WILL RESULT IN THE APPLICATION BEING CLOSED AND THE PLAN CHECK FEES BEING ASSESSED. ALL FEES UNDER THIS APPLICATION THEN BECOME NULL AND VOID**. This application does not authorize any work within the right-of-way or curb cuts, contact Public Works at 970-962-2516.

_____ _____

Signature Date

Office Use Only

City Calculated Valuation: $_____PCF Due $_____

PCF Receipt Sent:_____PCF Received: _____

Entered by:_____Date: _____ PERMIT NUMBER: _____

City of Loveland
DEVELOPMENT CENTER
Planning + Permitting + Building

Development Services
Building Division
410 E 5th Street • Loveland, CO 80537
(970) 962-2505 • Fax (970) 962-2904
www.cityofloveland.org

FOUNDATION SETBACK AND ELEVATION CERTIFICATION

DATE: _____

CITY OF LOVELAND
Building Division
500 E. 3rd St., Suite 110
Loveland, CO 80537

RE: Foundation Setback and Elevation Certification for LOT _____, BLOCK _____

_____ SUBDIVISION

ADDRESS _____ PERMIT # _____

To Whom It May Concern:

On _____, a field crew from this office measured the foundation setbacks and elevations for the above-referenced lot and found them to be in compliance with the Drainage and Development Plan approved by the City of Loveland. This determination was based on the location of the foundation forms prior to placement of footing/foundation material, (i.e. concrete and reinforcing steel).

Sincerely,

BY: _____ seal
Signature

_____
Printed name

Revised 08/09/06

City of Loveland
DEVELOPMENT CENTER
Planning + Permitting + Building

Development Services
Building Division
410 E 5th Street • Loveland, CO 80537
962-2505 • Fax (970) 962-2904
www.cityofloveland.org

STATE OF COLORADO)
) SS.
)
COUNTY OF LARIMER

AFFIDAVIT

I, _____ an authorized representative of _____ hereby **swear or affirm under penalty of perjury,** as follows:

All fire sprinkler piping and fire sprinkler head(s) that serve this structure are properly installed as permitted under the current building and/or plumbing code (International Residential Code (IRC) and specifically Section P2904) as adopted by the City of Loveland and per the recommended listing of the equipment.

Company Name: _____

Job Address: _____ Permit Number: _____

_____ _____
Signature of Licensed plumbing contractor Date

Colorado State License #: _____ City of Loveland License #: _____

City of Loveland
DEVELOPMENT CENTER
Planning + Permitting + Building

Development Services
Building Division
410 E 5th Street • Loveland, CO 80537
(970) 962-2505 • Fax (970) 962-2904
www.cityofloveland.org

*** * * Return completed form to City of Loveland Building Division. * * ***

Drainage plans for the property have been reviewed and accepted by the City of Loveland.

It is the responsibility of the builder to ensure that the elevation and grading of the lot are in accord with the approved grading and drainage plans for this subdivision and the approved site plan for this lot, including ensuring that the lowest opening elevation and top of foundation are within two inches of design elevation.

The following certification from a Professional Engineer will be required for this property prior to issuance of a Certificate of Occupancy.

Residential Certification of Lot Grading and Structure Elevation

Date:_____ **Lot:**_____**Block:**_____
Permit No._____ **Subdivision:**_____
Address:_____ **Parcel:** _____
Top of Foundation Elevation:_____ **Minimum Opening Elevation:**_____
Finished Floor Elevation:_____

I, (Print)_____**, a Colorado registered Professional Engineer, certify that the above referenced property located in City of Loveland, Larimer County, Colorado, was inspected on (Date)**_____ **, that construction and grading on the property is complete. (Attach site plan with as-built elevations/final grade survey.) I further certify that one of the following is true:**

□ **The grading and drainage patterns on the lot are completed within +/- 0.10 foot tolerance of the approved subdivision grading plan for this property and/or the approved site plan for this lot.**

□ **The grading and drainage patterns on the lot are not in conformance with the approved subdivision grading plan or the approved site plan for this property but adequately provide proper drainage away from buildings and off the lot without negatively affecting the lot, adjacent properties, structures or city infrastructure.**

Please address the following grading and drainage design elements by checking "yes" or "no". For every "no" answer, please provide an explanation of how the as-built grades differ from the design element and how it will not negatively affect the drainage patterns on this site, the surrounding properties and the downstream stormwater facilities. If other grading and drainage design elements that are not addressed in this list are in need of explanation, please provide those details in an attached letter.

1. **The elevations for the structure are within two inches of the elevations presented in the approved subdivision grading plan and the approved site plan for this lot.** **Yes** _____ **No** _____

_____

_____

Property Address: _____

2. **The finished grade is a minimum 6 inches below the top of foundation.** **Yes** _____ **No** _____

_____

_____

3. **The minimum grade away from the foundation and window wells is 5% for the first 5 to 10 feet.** **Yes** _____ **No** _____

_____

_____

4. **The minimum slopes on the lot are not less than 2%.** **Yes** _____ **No** _____

_____

_____

5. **No low spots exist on the property that could cause ponding and all areas of the lot drain away from the foundation and off the lot without negatively impacting the lot, adjacent properties or city infrastructure.** **Yes** _____ **No** _____

_____

_____

6. **Side lot line drainage swales are constructed per the approved subdivision grading plan and site plan for this lot and allow drainage off the lots without negatively impacting the lot, adjacent properties or structures.** **Yes** _____ **No** _____

_____

_____

7. **The downspouts are directed away from adjacent lots and will not flood window wells, foundations, etc. on the lot or on adjacent lots.** **Yes** _____ **No** _____

_____

_____

8. **Landscaping berms and features do not block the flow of water from draining away from the foundation and off the lot.** **Yes** _____ **No** _____

_____

_____

By: _____
(Signature, PE stamp)

This certification must be received in the Office of the City of Loveland Building Division (970-962-2505) prior to requesting a Certificate of Occupancy for the property.

Residential Lot Stormwater Quality Permit Application

BUILDING DIVISION
410 E. 5TH STREET • LOVELAND, CO 80537
(GENERAL INFORMATION) 970-962-2505
(FAX) 970-962-2904 • eplan-res@cityofloveland.org

STORMWATER DIVISION
PWA BUILDING • 2525 W. 1ST ST. • LOVELAND, CO 80537
(GENERAL INFORMATION) 970-962-2772
(FAX) 970-962-2908 • Stormwater@cityofloveland.org

TO SCHEDULE AN INSPECTION, THE BUILDING PERMIT NUMBER AND INSPECTION CODE WILL BE NEEDED.

BUILDING PERMIT INSPECTION LINE (970) 962-2100

PLEASE SELECT A STORMWATER INSPECTION CODE FROM THE FOLLOWING LIST:

6629 to schedule a stormwater inspection during the footing and foundation phase
6659 to schedule a stormwater inspection during rough construction (vertical) phase
6669 to schedule a stormwater inspection prior to Certificate of Occupancy or Letter of Completion

A Stormwater Quality Permit is required for land disturbance activities upon the property by means including but not limited to grading; excavating; stockpiling soil, fill or other materials; clearing; vegetation removal; removal or deposit of any rock, soil, or other materials; or other activities which disturb/expose soil.

(1) Project Information:

Address:	Zip Code:
Project Name:	
Legal Description:	

(2) Contact Information:

(a). Name of Owner:	
Address:	
Phone:	Fax:
Mobile:	E-mail:
(b). Name of Builder:	
Address:	
Phone:	Fax:
Mobile:	E-mail:
(c). Other:	
Address:	
Phone:	Fax:
Mobile:	E-mail:

(3) SWMP Administrator:

Name:	Check One: ☐ Phone ☐ Mobile	Number: _____

Building Permit No. _____

(4) List any site personnel along with their contact information who will have authority to make modifications to the Stormwater Management Plan (SWMP) if the SWMP Administrator is unavailable:

Name:	Check One: ☐ Phone ☐ Mobile	Number: _____
Name:	Check One: ☐ Phone ☐ Mobile	Number: _____

(5) Project Information:

Lot Size:

_____ sq. ft.

(1). Will excavated material remain on the lot in which the building is taking place?
☐ Yes ☐ No ☐ Some

(2). If no or some, please indicate where the excavated material will be placed below.

(3). Do you own the lot(s) where the excavated material will be placed? ☐ Yes ☐ No

Please Note: If you don't own the lot(s) where the excavated material is to be placed you will be required to submit a signed letter of permission from the owner(s) of the lot(s).

Location(s) of Excavated Material:

(6) Project Schedule:

Expected work start date: _____ | Expected work completion date: _____

As a condition for the issuance of a Stormwater Quality Permit for Residential dwellings, applicants shall be required to provide the City of Loveland a SWMP document specifically designed to address each lot that is disturbed as a result of the work described above or they can use the Small Site SWMP document (Drawing SW-16) developed by the City.

Are you using the Small Site Stormwater Management Plan (SWMP) document (Drawing SW-16) developed by the City?

☐ Yes ☐ No

WARNING:
The City of Loveland will not issue a Certificate of Occupancy if any of the sites disturbed as part of this Stormwater Quality Permit have not been sufficiently stabilized as determined in sole discretion by the City Inspector.

Note: This permit is separate from any permits that may be required by the Colorado Department of Public Health and Environment (CDPHE), Water Quality Control Division under the Colorado Discharge Permit System.

By signing and dating this application I acknowledge that:

- I have read all the documents attached to this permit application (**Residential Lot Stormwater Management Plan (SWMP) Guidance** and **Residential Lot Stormwater Quality Permit Fact Sheet)**, and filled out the application to the best of my knowledge, and;
- I understand what temporary sediment erosion control measures are required for the building site.
  Furthermore, I understand that the SWMP document applies to all lots disturbed as a result of this building permit along with the consequences to me if the control measures are not maintained in accordance with the City of Loveland's expectations.

APPLICANT SIGNATURE:_____ **DATE:** _____

*** FOR OFFICE USE ONLY ***

Applicant is using the City of Loveland Small Site Stormwater Management Plan (SWMP) document (Drawing SW-16): ☐ Yes ☐ No	
Received Stormwater Management Plan (SWMP): ☐ Yes ☐ No ☐ N/A	More than one lot is being impacted: ☐ Yes ☐ No
Received signed letter of permission from owner of lot to stockpile excavated material: ☐ Yes ☐ No ☐ N/A	Approved: ☐ Yes ☐ No
Staff Comments:	

Revised: June, 2016

Residential Lot Stormwater Quality Permit Fact Sheet

City of Loveland

PUBLIC WORKS ADMINISTRATION (PWA) BUILDING
PUBLIC WORKS/STORMWATER
2525 W. 1ST STREET, LOVELAND, CO 80537
970-962-2772 • (FAX) 970-962-2908
WWW.CITYOFLOVELAND.ORG/STORMWATER

1. Why is a Residential Lot Stormwater Quality Permit required from the City of Loveland?

The City of Loveland's stormwater program is mandated under the National Pollutant Discharge Elimination System (NPDES), a component of the Clean Water Act. The requirement is intended to reduce the amount of pollutants entering waterways such as streams, rivers, lakes, and wetlands as a result of runoff from residential, commercial and industrial areas. Large construction sites have been under a requirement from the State (the Colorado Department of Public Health & Environment (CDPHE) to obtain permit coverage since 1992 (Phase I of the program). Small construction sites have been under a requirement to obtain permit coverage from CDPHE since July 1, 2002.

2. When is a Residential Lot Stormwater Quality Permit required from the City of Loveland?

The **Residential Lot Stormwater Quality Permit,** to be referred to as **(Permit)** is part of the Building Inspection Process. A **Permit** is required from the City of Loveland for disturbance activities upon the property by means including but not limited to grading; excavating; stockpiling soil, fill or other materials; clearing; vegetation removal; removal or deposit of any rock, soil, or other materials; or other activities which disturb/expose soil.

3. What is necessary to obtain a Residential Lot Stormwater Quality Permit from the City of Loveland?

☐ **Fill-out all 6 sections, sign and date the Permit application form.**

- **Section 1 - Project Information**
  You will need to provide an address, zip code, project name, and legal description for the site.
- **Section 2 - Contact Information**
  You will need to provide the name, address, phone number(s), and e-mail of the **Owner** and **Builder**.
- **Section 3 – SWMP *(Stormwater Management Plan)* Administrator**
  You will need to designate a **SWMP Administrator** on the permit. *Note: The **SWMP Administrator** must be the person who will be the responsible party for the project regarding the installation & maintenance of temporary sediment/erosion control measures and who has the authority to make modifications to the **SWMP**.*
- **Section 4 – Site Personnel who have the authority to make modifications to the SWMP**
  You will need to provide the name(s) and contact information for any personnel other than the **SWMP Administrator** that are authorized to make modifications to the **SWMP**. *Note: Authorized site personnel are typically any site personnel in addition to the Permittee who can ensure quick response to control measure repairs and/or failures.*
- **Section 5 – Project Information**
  You will need to provide the lot size and where the excavated material will be placed.
- **Section 6 – Project Schedule**
  You will need to provide both the expected work start and completion dates.
- **Sign and Date the Permit application form.**

Note: Failure to fill-out* all 6 sections, sign and date *the Permit application could delay the start of the project.

- ☐ **Stormwater Management Plan (SWMP).** You may choose to (a.) use the City's standard **Residential Lot SWMP** drawing ***(Drawing SW-16)*** that meets the minimum design criteria or (b.) you may choose to design your own **SWMP**. Please refer to the **Residential Lot SWMP Guidance** for plan requirements if you choose to design your own **SWMP**. *Please Note: If no **SWMP** document is submitted with the Residential Lot Stormwater Quality Permit Application the City of Loveland will require you to comply with the **Residential Lot SWMP** drawing **(Drawing SW-16)**.*

- ☐ **Performance Security.** None

4. How often will the Stormwater Inspector perform inspections?

- ☐ **Stormwater Inspections**

  The City of Loveland stormwater inspector will perform at least three (3) site inspections during the development of the site. Please note that:

  - The **first (initial) site inspection** will occur during the grading and excavation process. Before construction begins the Builder will need to install the perimeter control measures to contain the site disturbances.
  - The **second site inspection** will occur when vertical construction begins. The Builder will need to install all BMP's and be actively maintaining them.
  - The **third (final) site inspection** will occur prior to issuing the certificate of occupancy. The Builder will need to turn the site over to the homeowner with all control measures installed and in good working order and the homeowner will need to be made aware, by the Builder at the time of closing that the control measures must remain in place until all landscaping improvements have been installed by the homeowner.

5. What will happen if I fail to install and/or maintain the BMP(s) for the site?

Since the **Permit** is part of the Building Inspection process it will follow the same processes and procedures for non-compliance as any other Building Inspection. The failure to install and/or maintain the control measures on your site could result in the following:

- A stoppage of Building Inspections until the site is in compliance as determined by the City of Loveland Stormwater Inspector, and;
- A $47.00 fee that the Building Department typically charges to "unlock" the inspection process.

Residential Lot
Stormwater Management Plan (SWMP) Guidance

PUBLIC WORKS ADMINISTRATION (PWA) BUILDING
PUBLIC WORKS/STORMWATER
2525 W. 1ST STREET, LOVELAND, CO 80537
970-962-2772 • (FAX) 970-962-2908
WWW.CITYOFLOVELAND.ORG/STORMWATER

A **Stormwater Management Plan (SWMP)** is required for all City of Loveland Stormwater Quality Permits. This guidance document is for those who have chosen not to use the recommended standard **Small Site SWMP** drawing ***(Drawing SW-16).*** It has been specifically designed to help you develop a **SWMP** for your residential lot construction site.

Although the **SWMP** shall be prepared in accordance with good engineering, hydrologic and pollution control practices it does not need to be prepared by a registered engineer. The main objective of the **SWMP** is to prevent potential sources of pollution, including sediment, which may reasonably be expected to affect the quality of stormwater discharges associated with construction and development from leaving your residential lot construction site. The **SWMP** must show the location of each **Control Measure** which will be used to reduce the pollutants in stormwater discharges associated with construction activity runoff.

The **SWMP** will need the following:

1. **A Base Map and/or Lot Drawing that:**
   - Shows all the existing water features, i.e., lakes, ditches, creeks, wetlands, etc., and labels them accordingly.
   - Shows the location of the building, driveway, sidewalks, patio(s), etc. All features should be labeled accordingly.
   - Shows the location of the gutter downspouts.
   - Shows the direction of the stormwater runoff.
   - Contains the following note: *"Note: The **SWMP** should be revised as the construction site conditions change so it accurately depicts the construction activity occurring on-site."*
2. **Location of Appropriate Control Measures**
   - The **SWMP** will need to show the location of the **Control Measures** that will be used and the **Control Measures** should be labeled accordingly:
     - Silt Fence (SF)
     - Concrete Washout (CW)
     - Wattle (W)
     - Port-o-let (P)
     - Construction Fence (CF)
     - Vehicle Tracking Control Pad (VTC)
     - Erosion Control Mat (ECM)
     - Dumpsters (D)
     - Waste Control (WC)

In addition to the **SWMP** the City of Loveland recommends the following:

1. **Develop a Spill Prevention Plan**
   - There should be a plan developed appropriate to the site to handle materials, prevent spills and remediate any spill that may occur.

2. **Develop Inspection and Maintenance Procedures**

The **Control Measures** will need to be inspected and maintained regularly to ensure they are in good and effective operating condition. *Note: An efficient record-keeping system is a helpful tool in managing inspection and maintenance reports. It is recommended that a logbook be maintained for inspection reports, maintenance records, spill response, weather conditions, training, correspondence, etc.* To avoid inspection delays the City of Loveland recommends the following:

a. Remove sediment from roadways by the end of each working day.

b. Inspect **Control Measures** regularly.
   - Perform inspection every 14 days, or following a significant stormwater event.
   - Complete an inspection report for each inspection performed. *Note: you can develop your own document or use the Inspection and Maintenance Procedures Form below.*
   - Keep inspection reports in a binder located on site.

c. Maintain **Control Measures** regularly.
   - Perform maintenance and repairs as soon as possible on items or areas identified in the inspection report.
   - Perform maintenance as indicated in the City of Loveland Storm Drainage Standards, per manufacturer's specifications, or other sources determined to be acceptable.

INSPECTION AND MAINTENANCE PROCEDURES FORM

Inspection Date: _____ **Time:** _____ ☐ a.m. ☐ p.m.

EROSION, SEDIMENT AND WASTE CONTROL MEASURES

No.	Control Measure	Practice Used		To Be Installed		Requires Maintenance		Needs Replacement (Not Functional)		Comments
		Yes	No	Yes	No	Yes	No	Yes	No	
1	Concrete Washout (CW)									
2	Construction Fence (CF)									
3	Dumpsters (D)									
4	Erosion Control Mat (ECM)									
5	Port-o-let (P)									
6	Silt Fence (SF)									
7	Vehicle Tracking Control (VTC)									
8	Waste Control (WC)									
9	Wattle (W)									
10										
11										

*Note: The failure to install and/or maintain the **Control Measures** for the site could result in a stoppage of building inspections until the site is in compliance as determined by the City of Loveland stormwater inspector.*

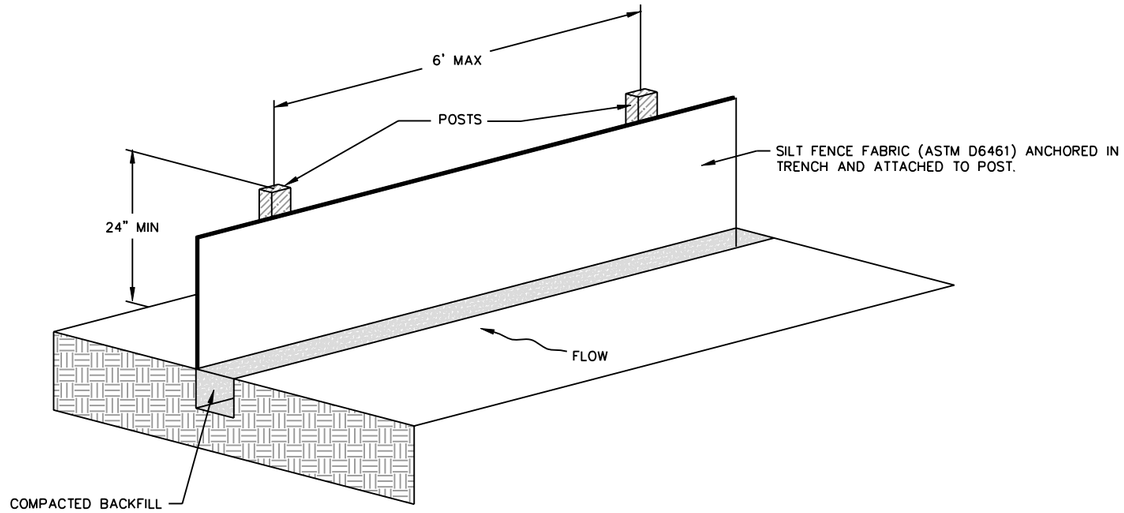

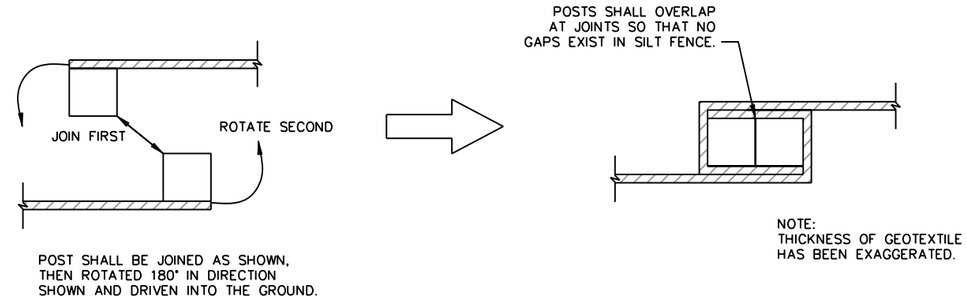

SILT FENCE JOINTS

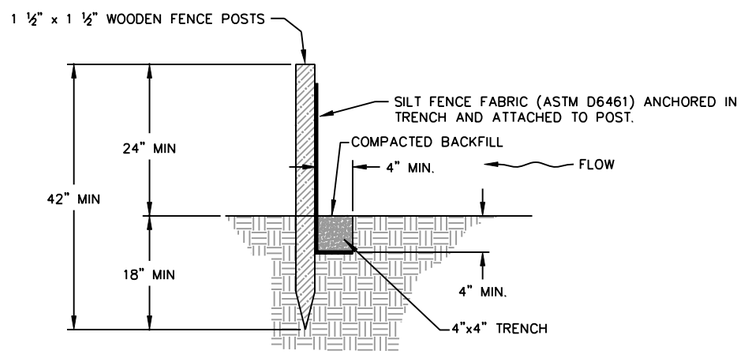

PREASSEMBLED SILT FENCE

INSTALLATION NOTES:

1. DRIVE POSTS VERTICALLY INTO THE GROUND TO A MINIMUM DEPTH OF 18".
2. EXCAVATE A TRENCH APPROXIMATELY 4" WIDE AND 4" DEEP ALONG THE LINE OF POSTS AND UPSLOPE FROM THE BARRIER.
3. ANCHOR TRENCH SHALL BE EXCAVATED BY HAND, WITH TRENCHER, OR WITH SILT FENCE INSTALLATION MACHINE. NO ROAD GRADERS, BACKHOES, ETC. SHALL BE USED.
4. NOT LESS THAN THE BOTTOM 1' OF THE SILT FENCE FABRIC SHALL BE BURIED IN THE TRENCH.
5. THE TRENCH SHALL BE COMPACTED BY HAND, WITH "JUMPING JACK" OR BY WHEEL ROLLING. COMPACTION SHALL BE SUCH THAT THE SILT FENCE RESISTS BEING PULLED OUT OF ANCHOR TRENCH BY HAND.
6. SILT FENCE INDICATED IN THE PLANS SHALL BE INSTALLED PRIOR TO ANY LAND-DISTURBING ACTIVITIES.
7. USE WOOD POSTS OR OTHER MATERIAL AS ACCEPTED BY THE CITY.

MAINTENANCE NOTES:

1. THE CONTRACTOR SHALL INSPECT SILT FENCE EVERY TWO WEEKS AND AFTER SIGNIFICANT STORM EVENTS AND MAKE REPAIRS OR CLEAN OUT UPSTREAM SEDIMENT AS NECESSARY. SEDIMENT ACCUMULATED UPSTREAM OF SILT FENCE SHALL BE REMOVED WHEN THE
2. UPSTREAM SEDIMENT REACHES A DEPTH OF 6".
3. SILT FENCE SHALL BE REMOVED WHEN THE UPSTREAM DISTURBED AREA IS STABILIZED AND GRASS COVER IS ACCEPTED BY THE CITY. IF ANY DISTURBED AREA EXISTS AFTER REMOVAL, IT SHALL BE SEEDED AND MULCHED OR OTHERWISE STABILIZED IN A MANNER ACCEPTED BY THE CITY.

	SILT FENCE (SF) —— SF —— SF ——		
CITY OF LOVELAND PUBLIC WORKS DEPT. STORMWATER	STORMWATER CONSTRUCTION DRAWINGS	APPROVED: KWG DATE: 8/17/07 DRAWN BY: TBK	DRAWING SW-10

W1 NOTES:

INSTALLATION:
WHEN INSTALLING RUNNING LENGTHS OF WATTLES, BUTT THE SECOND WATTLE TIGHTLY AGAINST THE FIRST, DO NOT OVERLAP THE ENDS. STAKE THE WATTLES AT EACH END AND FOUR FOOT ON CENTER. FOR EXAMPLE:

A 25 FOOT WATTLE USES 6 STAKES
A 20 FOOT WATTLE USES 5 STAKES
A 12 FOOT WATTLE USES 4 STAKES

STAKES SHOULD BE DRIVEN THROUGH THE MIDDLE OF THE WATTLE. LEAVING 2 – 3 INCHES OF THE STAKE PROTRUDING ABOVE THE WATTLE. A HEAVY SEDIMENT LOAD WILL TEND TO PICK THE WATTLE UP AND COULD PULL IT OFF THE STAKES IF THEY ARE DRIVEN DOWN TOO LOW. IT MAY BE NECESSARY TO MAKE A HOLE IN THE WATTLE WITH A PICK END OF YOUR MADDOX IN ORDER TO GET THE STAKE THROUGH THE STRAW. WHEN STRAW WATTLES ARE USED FOR FLAT GROUND APPLICATIONS, DRIVE THE STAKES STRAIGHT DOWN; WHEN INSTALLING WATTLES ON SLOPES, DRIVE THE STAKES PERPENDICULAR TO THE SLOPE.

DRIVE THE FIRST END STAKE OF THE SECOND WATTLE AT AN ANGLE TOWARD THE FIRST WATTLE IN ORDER TO HELP ABUT THEM TIGHTLY TOGETHER. IF YOU HAVE DIFFICULTY DRIVING THE STAKE INTO EXTREMELY HARD OR ROCKY SLOPES, A PILOT BAR MAY BE NEEDED TO BEGIN THE STAKE HOLE.

PERVIOUS INSTALLATION

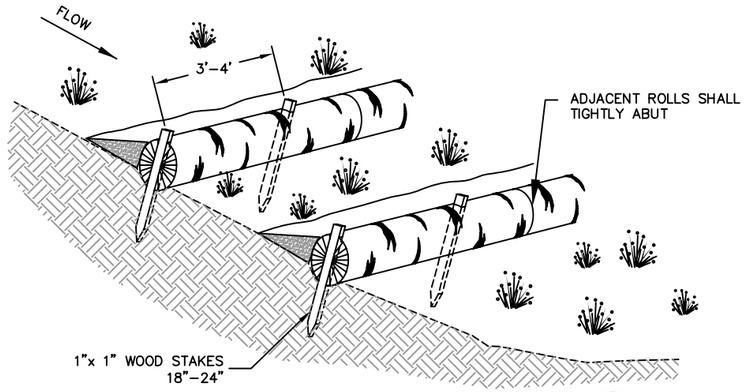

WATTLES – DETAIL A (W1)

W2 NOTES:

INSTALLATION:
STAKES SHOULD BE DRIVEN ACROSS FROM EACH OTHER AND ON EACH SIDE OF THE WATTLE. LEAVING 4"–6" OF STAKE PROTRUDING ABOVE THE WATTLE. BAILING WIRE OR NYLON ROPE SHOULD BE TIED TO THE STAKES ACROSS THE WATTLE. STAKES SHOULD THEN BE DRIVEN UNTIL THE BAILING WIRE OR NYLON ROPE IS SUFFICIENTLY SNUG TO THE WATTLE.

WHEN INSTALLING RUNNING LENGTHS OF WATTLES, TO PREVENT SHIFTING, BUTT THE SECOND WATTLE TIGHTLY AGAINST THE FIRST. DO NOT OVERLAP THE ENDS. STAKES SHOULD BE DRIVEN 1 FT. FROM END, ACROSS FROM AND ON EACH SIDE OF WATTLE LEAVING 4"–6" OF STAKE PROTRUDING ABOVE THE WATTLE. BAILING WIRE OR NYLON ROPE SHOULD BE TIED TO STAKES IN AN HOUR GLASS FORMATION (FRONT TO BACK OF WATTLE "A", ACROSS TO FRONT OF WATTLE "B", ACROSS TO BACK AND BACK TO FRONT OF WATTLE "A"). STAKES SHOULD THEN BE DRIVEN IN UNTIL BAILING WIRE OR NYLON ROPE IS SUFFICIENTLY SNUG TO THE WATTLE.

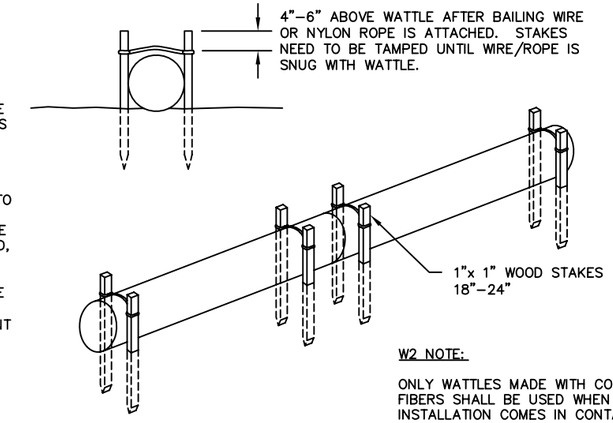

W2 NOTE:

ONLY WATTLES MADE WITH COCONUT FIBERS SHALL BE USED WHEN INSTALLATION COMES IN CONTACT WITH A WATER BODY.

W1 & W2 INSTALLATION NOTES:

1. THE LOCATION AND LENGTH OF WATTLE IS DEPENDENT ON THE CONDITIONS OF EACH SITE.
2. WATTLES SHALL BE INSTALLED PRIOR TO ANY LAND–DISTURBING ACTIVITIES.
3. WATTLES SHALL CONSIST OF STRAW, COMPOST, EXCELSIOR, OR COCONUT FIBER.
4. NOT FOR USE IN CONCENTRATED FLOW AREAS.
5. THE WATTLES SHALL BE TRENCHED INTO THE GROUND A MINIMUM OF TWO (2) INCHES.
6. WATTLES SHALL BE INSTALLED PER MANUFACTURERS SPECIFICATIONS.
7. ON SLOPES, WATTLES SHOULD BE INSTALLED ON CONTOUR WITH A SLIGHT DOWNWARD ANGLE AT THE END OF THE ROW IN ORDER TO PREVENT PONDING AT THE MID SECTION.
8. RUNNING LENGTHS OF WATTLES SHOULD BE ABUTTED FIRMLY TO ENSURE NO LEAKAGE AT THE ABUTMENTS.
9. SPACING – DOWNSLOPE:
   VERTICAL SPACING FOR SLOPE INSTALLATIONS SHOULD BE DETERMINED BY SITE CONDITIONS. SLOPE GRADIENT AND SOIL TYPE ARE THE MAIN FACTORS. A GOOD RULE OF THUMB IS:

   1:1 SLOPES = 10 FEET APART
   2:1 SLOPES = 20 FEET APART
   3:1 SLOPES = 30 FEET APART
   4:1 SLOPES = 40 FEET APART, ETC.

   HOWEVER, ADJUSTMENTS MAY HAVE TO BE MADE FOR THE SOIL TYPE: FOR SOFT, LOAMY SOILS – ADJUST THE ROWS CLOSER TOGETHER; FOR HARD, ROCKY SOILS – ADJUST THE ROWS FURTHER APART. A SECONDARY WATTLE PLACED BEHIND THE ABUTMENT OF TWO WATTLES IS ENCOURAGED ON STEEP SLOPES OR WHERE JOINTS HAVE FAILED IN THE PAST.
10. STAKING: THE CITY RECOMMENDS USING WOOD STAKES TO SECURE THE WATTLES. 1/2" TO 5/8" REBAR IS ALSO ACCEPTABLE. BE SURE TO USE A STAKE THAT IS LONG ENOUGH TO PROTRUDE SEVERAL INCHES ABOVE THE WATTLE: 18" IS A GOOD LENGTH FOR HARD, ROCKY SOIL. FOR SOFT LOAMY SOIL USE A 24" STAKE.

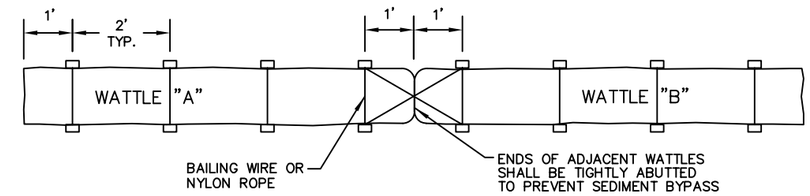

WATTLES – DETAIL B (W2)

W3, W4 & W5 NOTES:

1. WHEN USING STRAW WATTLE, THE STRAW WATTLE MUST HAVE A WEIGHTED CORE.
2. ALL PRODUCTS SHALL BE INSTALLED PER THE MANUFACTURER'S SPECIFICATIONS.
3. OTHER PRODUCTS MAY BE USED IN PLACE OF WEIGHTED WATTLES UPON WRITTEN APPROVAL FROM THE CITY. NOTE: A COPY OF DETAILS AND SPECIFICATIONS WILL NEED TO BE INCORPORATED INTO THE SWMP.

W3 NOTE:

IF THE AREA BEHIND THE INLET IS NOT STABILIZED, A BMP SHOULD BE USED TO PREVENT SEDIMENT FROM ENTERING THE INLET

IMPERVIOUS INSTALLATION

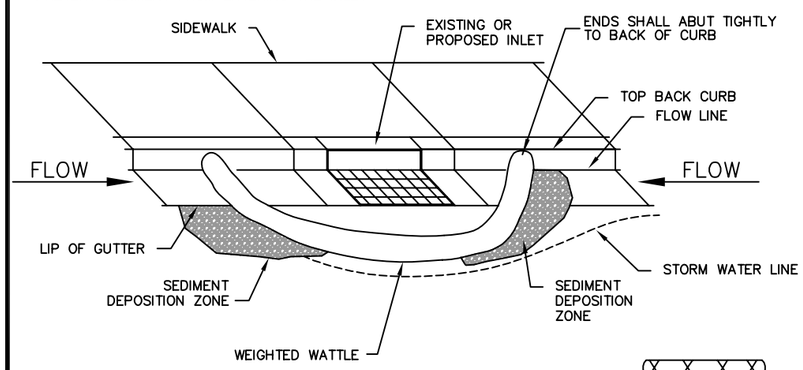

CURB INLET WATTLE PROTECTION SETUP (W3)

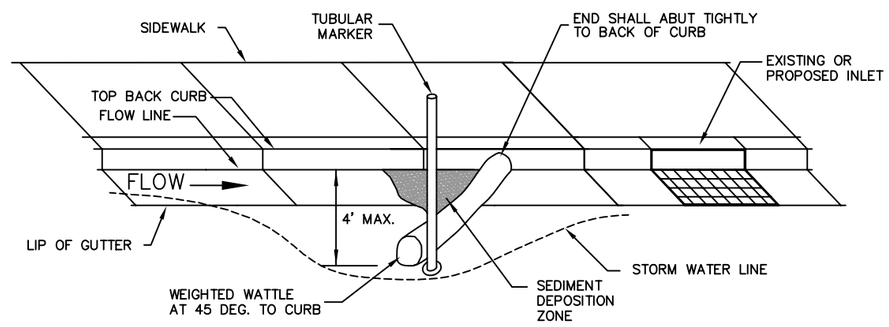

W4 NOTES:
1. NUMBER OF WATTLES AND SPACING SHOULD BE DETERMINED BY THE SLOPE AND SITE CONDITIONS.
2. TUBULAR MARKERS SHALL MEET THE REQUIREMENTS OF MANUAL ON UNIFORM TRAFFIC CONTROL DEVICES (MUTCD)
3. CITY RECOMMENDS INSTALLING AT LEAST 3 CHECKDAMS WHEN USING THIS SETUP.

CURBSIDE CHECKDAMS SETUP (W4)

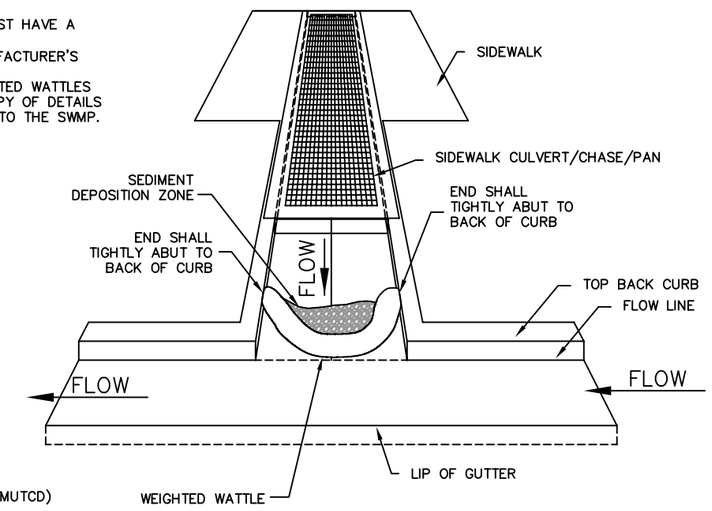

CONCRETE CHASE/TRICKLE CHANNEL SETUP (W5)

WATTLE MAINTENANCE NOTES:

1. THE CONTRACTOR SHALL INSPECT WATTLES EVERY TWO WEEKS AND AFTER ANY SIGNIFICANT STORM EVENT AND MAKE REPAIRS OR REMOVE SEDIMENT ACCUMULATED BEHIND WATTLE AS NECESSARY.
2. SEDIMENT ACCUMULATED BEHIND WATTLE SHALL BE REMOVED WHEN THE SEDIMENT HAS ACCUMULATED TO ONE HALF THE DIAMETER OF THE WATTLE.
3. WATTLES SHALL REMAIN IN PLACE UNTIL THE UPSTREAM DISTURBED AREA IS STABILIZED AND IS ACCEPTED BY THE CITY.

WATTLE INSTALLATION (W)			
CITY OF LOVELAND PUBLIC WORKS DEPT. STORMWATER	STORMWATER CONSTRUCTION DRAWINGS	APPROVED: KWG DATE: 4/23/09 DRAWN BY: TBK	DRAWING SW–13

INSTALLATION NOTES:

1. VEHICLE TRACKING CONTROL PAD SHALL BE LOCATED AT EVERY ACCESS POINT TO THE CONSTRUCTION SITE.
2. A SIGN SHALL BE PLACED NEXT TO THE VEHICLE TRACKING CONTROL PAD TO DESIGNATE THE LOCATION AS THE CONSTRUCTION ENTRANCE/EXIT.
3. VEHICLE TRACKING CONTROL (VTC) PADS SHALL CONSIST OF HARD, DENSE, DURABLE ROCK, ANGULAR IN SHAPE AND RESISTANT TO WEATHERING. ROUNDED STONE SHALL NOT BE USED, i.e., RIVER ROCK AND COBBLES. THE ROCK SHALL BE A MINIMUM OF 3" AND A MAXIMUM OF 6" DIAMETER. THE ROCK SHALL HAVE A SPECIFIC GRAVITY OF AT LEAST 2.6. CONTROL OF GRADATION WILL BE BY VISUAL INSPECTION. NOTE: OTHER MATERIALS, i.e., ROADBASE, MUD MATS, ETC., MAY BE USED IN PLACE OF ROCK UPON WRITTEN APPROVAL OF THE CITY INSPECTOR.
4. ANY CRACKED OR DAMAGED CURB AND GUTTER AND SIDEWALK SHALL BE REPLACED BY CONTRACTOR.
5. ALTHOUGH NOT NORMALLY USED, THE CITY RESERVES THE RIGHT TO REQUIRE VEHICLE TRACKING CONTROL WITH A TEMPORARY CATTLE GUARD AND/OR WHEEL WASH FACILITIES AT SITES WHERE TRACKING ONTO PAVED AREAS BECOMES A SIGNIFICANT PROBLEM AS DETERMINED BY THE CITY INSPECTOR.
6. IF VEHICLE TRACKING CONTROL WITH WHEEL WASH FACILITIES ARE REQUIRED, ALL WHEELS ON EVERY VEHICLE LEAVING THE SITE SHALL BE CLEANED OF MUD USING A PRESSURE-WASHER. THE CONTRACTOR SHALL BE RESPONSIBLE FOR OBTAINING A WATER SOURCE AND CONSTRUCTING A WASHWATER SEDIMENT TRAP.

MAINTENANCE NOTES:

1. CONTRACTOR SHALL INSPECT VEHICLE TRACKING CONTROL PAD DAILY. ROCK SURFACE SHALL BE CLEAN AND LOOSE ENOUGH TO RUT SLIGHTLY UNDER WHEEL LOADS AND CAUSE LOOSE ROCK TO DISLODGE MUD FROM TIRES. WHEN ROCK BECOMES COMPACTED OR FILLED WITH SEDIMENT SO THAT THE EFFECTIVENESS OF THE PAD IS DIMINISHED, CONTRACTOR SHALL RIP, TURN OVER, OR OTHERWISE LOOSEN ROCK, PLACE ADDITIONAL NEW ROCK, OR REPLACE WITH NEW ROCK AS NECESSARY TO RESTORE EFFECTIVENESS.
2. SEDIMENT AND OTHER MATERIAL SPILLED, DROPPED OR TRACKED ONTO PAVED SURFACES SHALL BE REMOVED IMMEDIATELY OR BY THE END OF EACH WORKING DAY.
3. VEHICLE TRACKING CONTROL PAD SHALL BE REMOVED AT THE END OF CONSTRUCTION. THE AREA SHOULD BE TOPSOILED, SEEDED, CRIMPED, AND MULCHED OR OTHERWISE STABILIZED.
4. IF VEHICLE WHEEL WASH FACILITIES ARE REQUIRED, CONTRACTOR SHALL INSPECT VEHICLE TRACKING CONTROL AND WHEEL WASH FACILITIES DAILY. ACCUMULATED SEDIMENTS SHALL BE REMOVED FROM THE PAD SURFACE.
5. ACCUMULATED SEDIMENT IN THE WASHWATER/SEDIMENT TRAP SHALL BE REMOVED WHEN THE SEDIMENT REACHES AN AVERAGE DEPTH OF 12-INCHES.

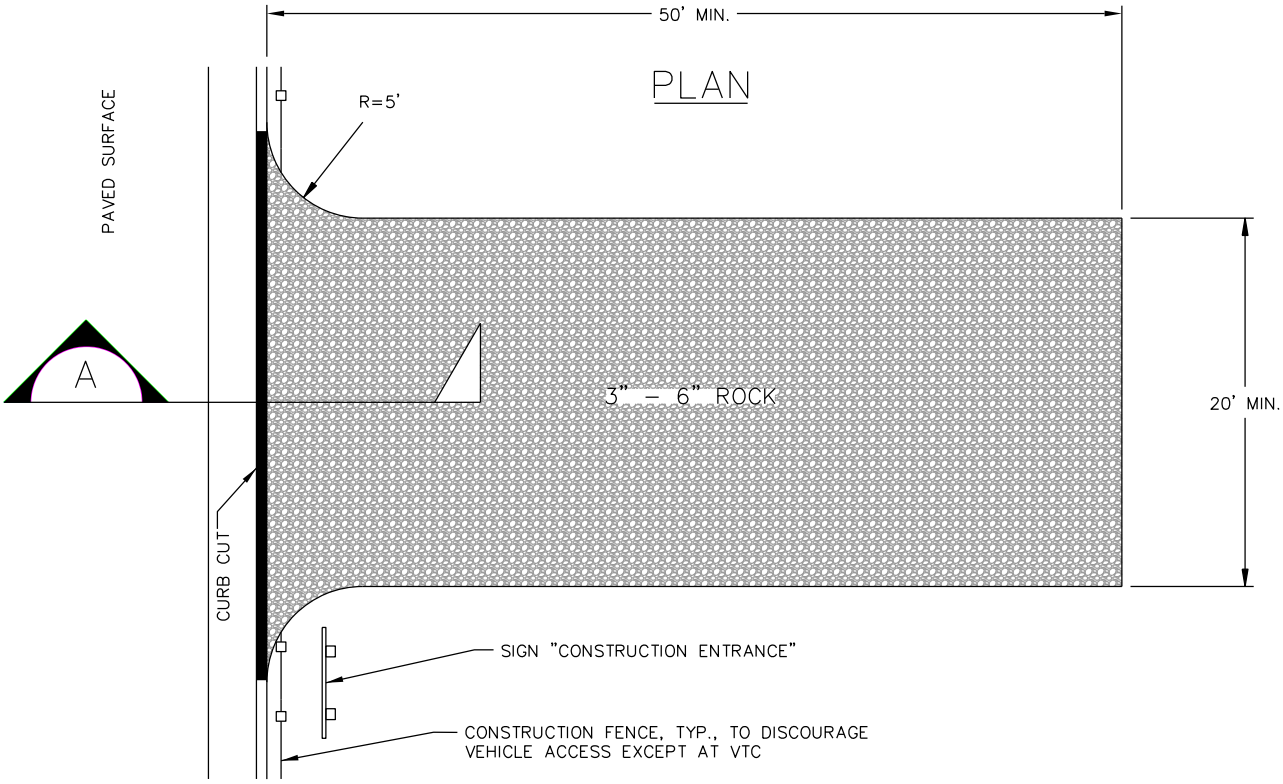

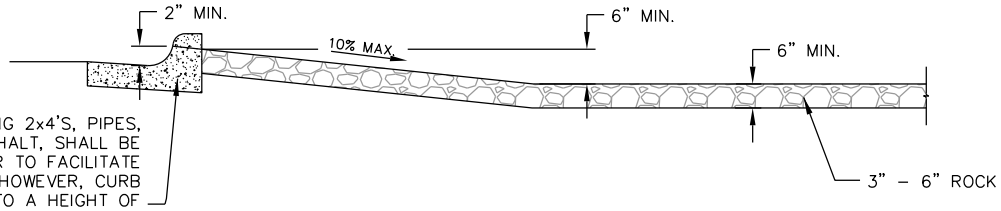

NO MATERIALS INCLUDING 2x4'S, PIPES, DIRT, GRAVEL OR ASPHALT, SHALL BE PLACED IN GUTTER TO FACILITATE MOUNTING CURB; HOWEVER, CURB MAY BE CUT DOWN TO A HEIGHT OF 2" OR HIGHER FOR EASIER ACCESS AND REPLACED AT PROJECT COMPLETION. OTHER ACCESS DEVICES MAY BE USED AS ACCEPTED BY THE CITY.

SECTION A

VTC

VEHICLE TRACKING CONTROL PAD

VTC

CITY OF LOVELAND PUBLIC WORKS DEPT. STORMWATER	STORMWATER CONSTRUCTION DRAWINGS	APPROVED: KWG DATE: 3/18/13 DRAWN BY: TBK	DRAWING SW-15

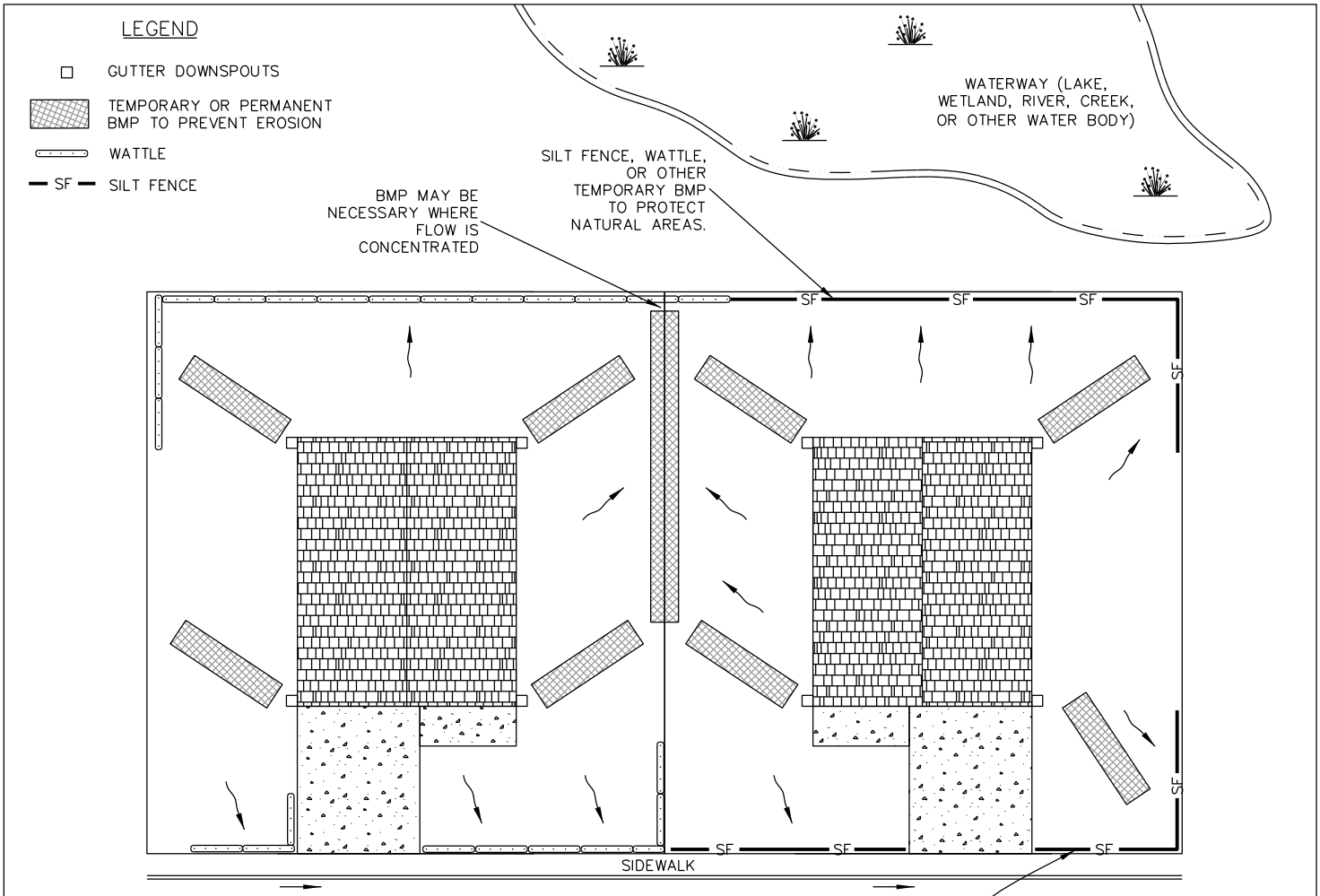

TYPICAL PLAN VIEW

SILT FENCE, WATTLE, OR OTHER TEMPORARY BMP TO PREVENT SEDIMENT FROM WASHING ONTO ROAD.

1. STORMWATER QUALITY BEST MANAGEMENT PRACTICES SHALL BE IMPLEMENTED TO MINIMIZE SOIL EROSION, SEDIMENTATION, INCREASED POLLUTANT LOADS AND CHANGED WATER FLOW CHARACTERISTICS RESULTING FROM LAND DISTURBING ACTIVITY, TO THE MAXIMUM EXTENT PRACTICABLE, SO AS TO MINIMIZE POLLUTION OF RECEIVING WATERS.
2. IT IS THE OBLIGATION OF THE PERMITTEE TO ENSURE THAT EROSION CONTROL MEASURES SHALL BE INSTALLED AND MAINTAINED THROUGHOUT CONSTRUCTION, UNTIL FINAL SOIL STABILIZATION/REVEGETATION IS ACHIEVED.
3. INSTALL TEMPORARY BMPs TO INTERCEPT AND PREVENT ALL SEDIMENT FROM BEING TRANSPORTED IN RUNOFF FROM THE LOT.

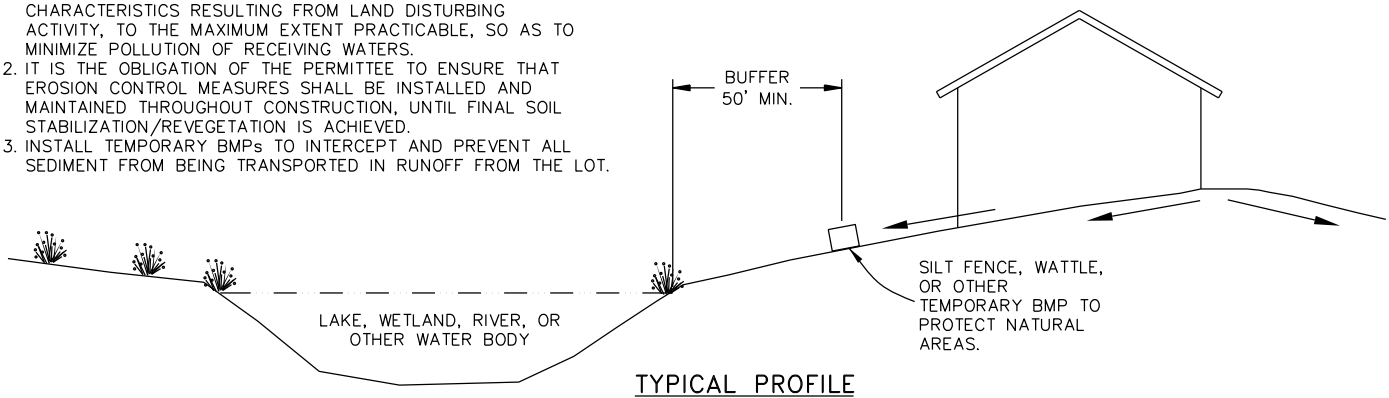

TYPICAL PROFILE

4. INSTALLATION AND MAINTENANCE OF TEMPORARY LOT SEDIMENT AND EROSION CONTROL BMPs SHALL COMPLY WITH CHAPTER 13.20 OF THE LOVELAND MUNICIPAL CODE.
5. INSPECTION FREQUENCY: ONCE EVERY FOURTEEN (14) DAYS AND AFTER EVERY SIGNIFICANT STORM EVENT.
6. MAINTENANCE: SEDIMENT AND OTHER MATERIAL SPILLED, DROPPED, OR TRACKED ONTO PUBLIC ROADS SHALL BE REMOVED BY THE END OF EACH WORKING DAY. SEDIMENT SHALL BE REMOVED UPSTREAM OF SILT FENCE AND WATTLES WHEN THEY ARE ½ FULL.
7. A VEHICLE TRACKING CONTROL PAD (VTC) MAY BE REQUIRED BY THE CITY INSPECTOR WHERE TRACKING ONTO PAVED AREAS BECOMES A SIGNIFICANT PROBLEM AS DETERMINED BY THE CITY INSPECTOR IN THEIR SOLE DISCRETION.
8. PORT-O-LETS SHALL BE ANCHORED AT ALL TIMES AND PLACED NO CLOSER THAN 50 FT. TO A STORM DRAIN INLET UNLESS OTHERWISE APPROVED BY THE CITY INSPECTOR.
9. TEMPORARY BMPs SHALL BE UTILIZED TO PREVENT CONCRETE AND OTHER MATERIALS FROM BEING RANDOMLY DISPOSED OF ON-SITE.
10. GOOD HOUSEKEEPING SHALL BE PERFORMED DAILY TO PREVENT CONSTRUCTION MATERIALS FROM BEING DISCHARGED OFF-SITE.
11. DUMPSTERS SHALL BE COVERED AND PLACED NO CLOSER THAN 50 FT. TO A STORM DRAIN INLET UNLESS OTHERWISE APPROVED BY THE CITY INSPECTOR.

RESIDENTIAL LOT STORMWATER MANAGEMENT PLAN (SWMP)

CITY OF LOVELAND PUBLIC WORKS DEPT. STORMWATER	STORMWATER CONSTRUCTION DRAWINGS	APPROVED: KWG		DRAWING
		DATE: 1/25/12		SW-16
		DRAWN BY: CAC		

BMPs for Initial and Mid-Construction Inspections

Cut back - Cut down lot 2”-4” below back of sidewalk or curb.
Benefits - Low cost, can drive over.
Disadvantages - High maintenance as you bust clean all sediment off paved surfaces. Will not work once lot is set to grade.

Trench/Berm - Use mechanical equipment to cut in a trench and then drive over spoils to create a berm.
Benefits - Low cost and easy to maintain.
Disadvantages - Only suitable for back and side of lot away from paved surfaces. Will not work once lot is set to grade and must be removed before final inspection.

Foam Wattles -
Benefits - Reusable, can drive over, easily installed and maintained.
Disadvantages - Cost may be high.

Straw Wattles -
Benefits - Easy to install and does an excellent job keeping sediment on lot if installed correctly. Low cost.
Disadvantages - Cannot be driven over, must be staked in place, can be hard to maintain with trades driving/walking over and smashing.

BMPs for Initial and Mid-Construction Inspections

Silt Fence -
Benefits - Does an excellent job keeping sediment on lot if installed correctly. May be a low cost option compared to other BMPs.
Disadvantages - Cannot be driven over, hard to install correctly, can be hard to maintain with trades driving/walking over, hard to maintain with strong winds.

Vehicle Tracking Controls -
Benefits - Does an excellent job keeping sediment on lot if installed correctly.
Disadvantages - Maybe expensive and hard to find an applicable location on small lots.

BMPs for Final CO Acceptance

Erosion Fabric -
Benefits - Easy to install and does an excellent job keeping sediment on lot, prevents rilling and rutting and looks clean for the new owner.
Disadvantages - Cost.

Landscaped Area-
Benefits - This is the best option as it will fully prevent erosion of sediment.
Disadvantage - It is not always feasible for the builder to complete landscaping before the issuance of C.O.

Rock-
Benefits - Cost, easy to intall.
Disadvantages - May not fully prevent erosion of sediment and therefore maintenance may be more cumbersome.

Wattles -
Benefits - Could reuse materials already onsite and easy to install.
Disadvantages - If not installed properly it can cause more of a mess.

Residential Water & Wastewater Service Installation Report Instructions

City of Loveland

It is the Contractor and service line installer's responsibility to install the water and wastewater service lines per the Manufacture's requirements, current requirements of the International Plumbing Code, and current Industry standards.

Wastewater Service Installation Recommendations:

Material: PVC SDR 35 gasketed pipe and fittings (no glued joints). Schedule 40 PVC is recommended under any structural slabs (garages).

Bedding: 3/4" gravel or granular material or Pea Gravel (native materials are not suitable backfill). The bedding should extend a minimum of 4" under the pipe and around the pipe to a distance of 12" around the sides and the top of the pipe. Bedding materials should be placed to provide a uniform support under the pipe to prevent low spots.

Depth: Building sewers shall be installed not less than 24" below grade.

Slope: The pipe should be laid as consistent as possible with slopes as recommended by the IPC (4": 2.08% Min/21.02% Max, 6": 1.04% Min/12.25% Max)

Vertical Bends: Should be used if pipe slopes reach maximum and should be supported in the recommended 3/4" gravel bedding through the vertical portion of pipe.

Cleanouts: Should be provided as recommended by the IPC: located not more than 100' apart and should be installed at each change of direction greater than 45 degrees.

Water Service Installation Recommendations:

Material: Type K Copper or Copper tubing sized (CTS) High Density Polyethylene (HDPE) (needs to meet criteria for direct bury and potable water) with compression fittings.

Bedding: Preference of washed sand. Alternative is washed pea gravel.

Depth: Exterior water supply piping shall be installed not less than 54" below grade.

Tracer Wire Installation Recommendations:

Material: If using plastic pipe provide a single strand of coated 12 gage wire with the pipe for future tracing.

Splice Kits: Gel type

Ground Rods: for wastewater service only – Copperhead ANO-12 or approved equal

Tracer Wire Test Station: Brooks Products 1-RT, *or C.P. Test Service Inc. Mini Box, or approved equal.*

Download & Complete the **Water & Wastewater Service Installation Report**.
Download the current form from the Building Department Website

On page 1 of the form, the service line installer will need to sketch the as-built location of the water and wastewater services in the areas provided.

On page 2 of the form provide photographs detailing the tracer wire, grounding rod, splice kits, and tracer wire test station.

** The requirement for wastewater tracer wire is waived if there is no tracer wire stub for the wastewater service.

Email the completed **Water & Wastewater Service Installation Report** when complete, **but prior to CO**, to the Building Department to *eplan-res@cityofloveland.org*

Do Not call the Water & Power Dispatch center to schedule utility inspections.

If you have any questions on the Report please contact (970) 962-3750

Irrigation Sprinkler Permits are required for residential irrigation systems. Instructions and permits are on the Web at: http://www.cityofloveland.org/index.aspx?page=1251

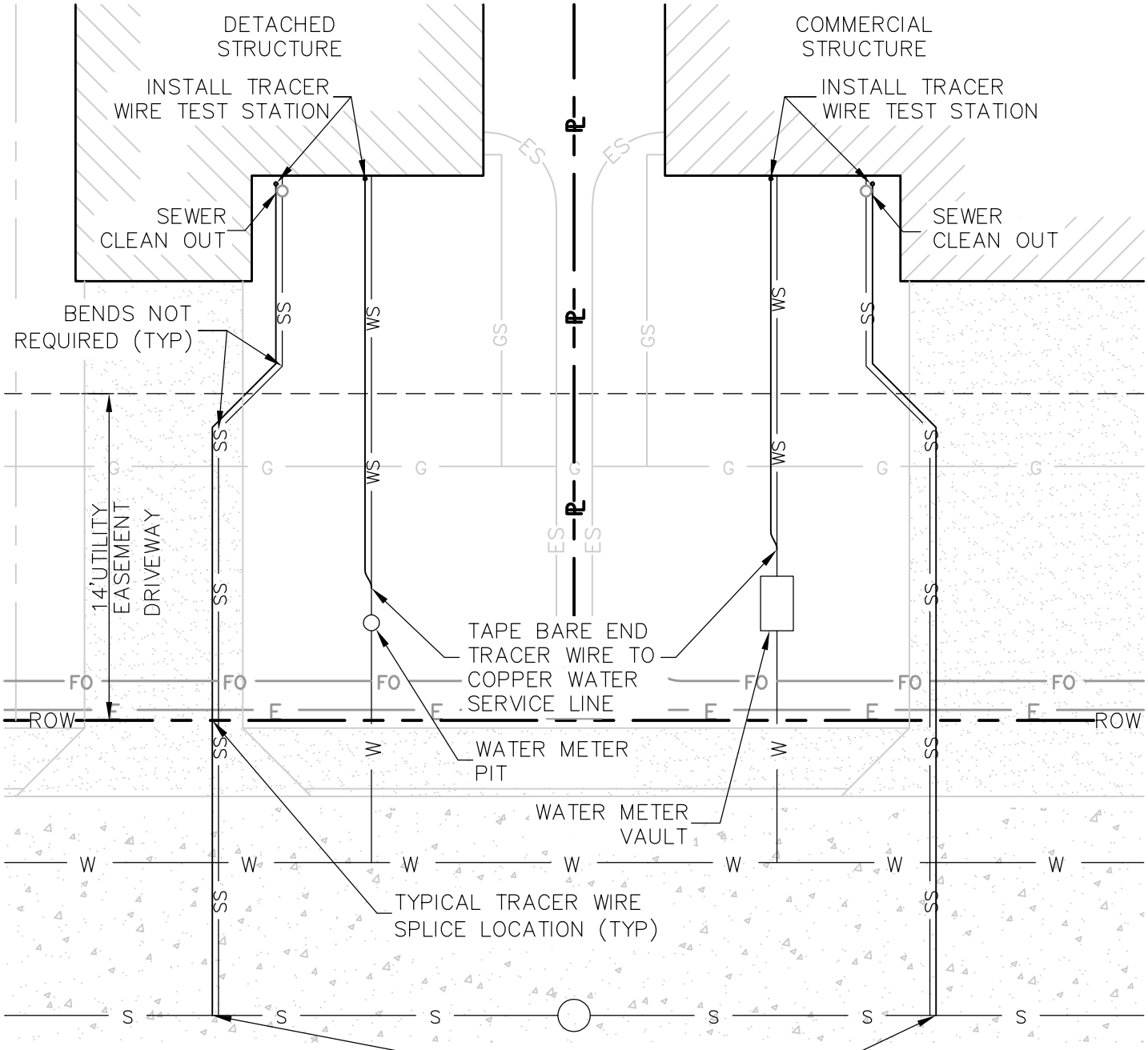

NOTES:

1. TRACER WIRE SHALL BE REQUIRED FOR ALL NON-METALLIC PIPES.
2. PLACE TRACER WIRE ON TOP OF PIPE AND TAPE A MINIMUM 10 FOOT SEGMENTS.
3. GROUNDING ROD SHALL BE INSTALLED INTO UNDISTURBED SOIL AND WITHIN 12" OF HORIZONTAL SEPARATION OF THE SEWER MAIN OR SEWER MANHOLE.
4. ONLY ONE UNDERGROUND WIRE SPICE WILL BE ALLOWED. SPLICE SHALL BE IN A GEL CAP SPLICE KIT SUITABLE FOR UNDERGROUND INSTALLATION.
5. FOR SERVICE STUBS FOR FUTURE CONNECTIONS PROVIDE A MINIMUM OF TWO FEET OF WIRE WRAPPED AND TAPED TO MARKER POST.

INSTALL GROUND ROD NEXT TO SEWER MAIN AND ATTACHE SANITARY SEWER LOCATE WIRE USING GEL SPLICE KIT. (GROUND ROD SHALL BE COPPERHEAD ANO-12 OR APPROVED EQUAL)

WATER AND SEWER SERVICE TRACER WIRE DETAIL

CITY OF LOVELAND DEPARTMENT OF WATER AND POWER	W/WW CONSTRUCTION DRAWINGS	DATE APPROVED: 01/19	DRAWING	
		DATE REVISED: 2019 10TH EDITION	W-106	

Residential Water & Wastewater Service Installation Report

Email all pages of completed form to: eplan-res@cityofloveland.org. This form is required prior to Certificate of Occupancy, but may be submitted at any time during construction. If you have any questions on this form contact (970) 962-3750.

Address: _____ Building Permit #: _____
Subdivision: _____ Installation Date: _____
Lot #: _____ Block: _____

Water and Wastewater Service Sketch

Wastewater Profile Sketch

Sketch Criteria: Show North Arrow, lot lines, piping lengths, piping material types, depths, couplings, fittings, clean-outs, curb stop box or meter pit referenced from two locations, sidewalk with "W" and "S" each location, foundation, ground level, piping slope.

Installer Certification: (By signing, you are certifying that the sketch is drawn correctly.)
Company Name: _____ Installer name: _____
Address: _____ Installer Signature: _____
City: _____ State: ____ Zip: _____ Phone #: (_____)_____

Builder Certification: (By signing, you are certifying that the Installer has installed the water and sewer services as sketched.)
Company Name: _____ Superintendent name: _____
Address: _____ Superintendent Signature: _____
City: _____ State: ____ Zip: _____ Phone #: (_____)_____

Tracer Wire Installation Photographs

As of August 8, 2018 per Colorado Law- the installation of all underground water and wastewater services are required to be electronically locatable. Per Detail W-106 tracer wire is required to be installed on all non-metallic pipe. Tracer wire test stations are required near the house foundation.

** The requirement for wastewater tracer wire is waived if there is no tracer wire stub for the wastewater service.

Provide in the space below at least 3 photographs per the suggested criteria below. Identify all photographs with information shown and date taken. If submitting more photographs than will fit on this page, use additional pages

Photo Criteria: Photo 1 Show service connection to stubs with evidence of any splices and/or tape to existing copper pipe
Photo 2 General service trench showing service and tracer wire attached to pipe
Photo 3 Show tracer wire test station with wires visible

ELECTRIC SERVICE WORKSHEET - RESIDENTIAL

☐ New Service ☐ Upgrade Existing Service ☐ Disconnect/Reconnect

A completed form must be submitted with any permit application that includes electrical work.

CW#_____

Please complete the following items on the checklist:

- ☐ Complete all sections of this form.
- ☐ Email PowerDevelopment@cityofloveland.org or call (970) 962-3542 to schedule an appointment for a site visit and review of this form.
- ☐ Submit payment/deposit to Water and Power. **This payment is just for the Power Division construction costs, there are additional fees from the Building Division. If you are making a deposit, there may be additional charges for actual time and material.
- ☐ Take completed form signed by Distribution Designer to Building Division to file for permit.
- ☐ **Notify Dispatch 962-3581 at least 48 hours in advance to schedule Disconnect/Reconnect**

Contact Information	Electrical Contractor Information
Name of Person Submitting Request: _____	☐ Same as Contact Information
Company Name:_____	Company Name:_____
Phone #_____ Email _____	Contact Person:_____
	Phone #_____Email _____

Customer Information	Billing Information
Customer Name: _____	Bill To: _____
Mailing Address: _____	Mailing Address:_____
Phone #_____Email _____	Phone #_____Email _____

Location Information

Service Address:_____Unit#_____

If this is part of a multi-occupancy building, give the building's entire address range: _____

☐ New Construction ☐ Existing Structure ☐ Addition to Existing Structure ☐ Demolition Within City Limits? ☐ Yes ☐ No

☐ Overhead ☐ Underground ☐ Overhead to Underground

Type of work to be done (Required): _____

_____

Will temporary service be needed? ☐ Yes ☐ No

Service Information	Customer Fees (Completed by Distribution Designer)
Existing Disconnect Size _____ amps	Deposit $_____ ☐ Bill for actuals
New Disconnect Size _____ amps	Flat Fee $_____
Existing Service Size _____	PIF $_____
New Conductor Size _____	

Crew Section	Date	Meter No.	Reading	Serial No.	Make	Type	Phase	Wire	Amps	Volts	Form (FM)
Removal											
Install											

Comments:

TO BE SIGNED AFTER REVIEW BY DESIGNER: By signing and submitting this form, you acknowledge and agree to the City of Loveland Requirements for Electric Service (Available online and in person). These requirements apply to all new electric installations and additions to or modifications of existing electric installations.

Signature _____ Date _____

Distribution Designer _____ Date _____