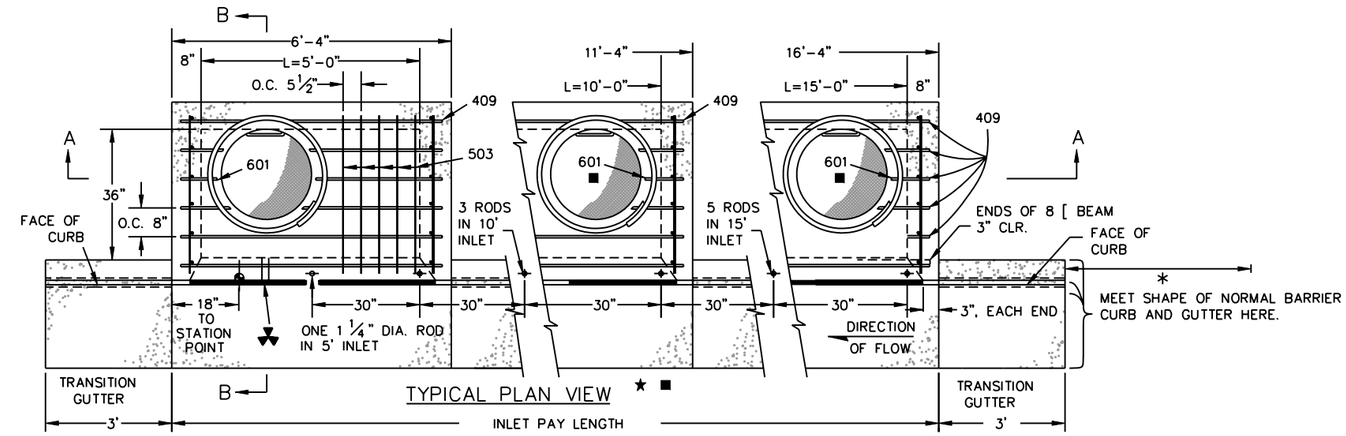

TYPICAL PLAN VIEW

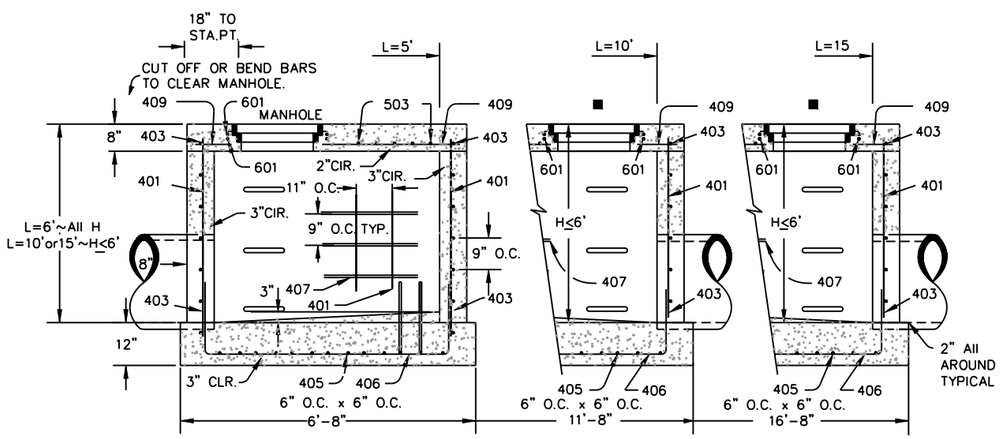

SECTION A–A REGULAR INLET

★ FOR LENGTH GREATER THEN 5 FT. PROVIDE ACCESS AT BOTH ENDS.

■ ADDITIONAL MANHOLE RING AND COVER REQUIRED WHEN LENGTH IS GREATER THAN 10'. CUT REINFORCEMENT BAR ACCORDINGLY.

▲– FOR A 1'–0" PAN SLOPE 2" PER FT.

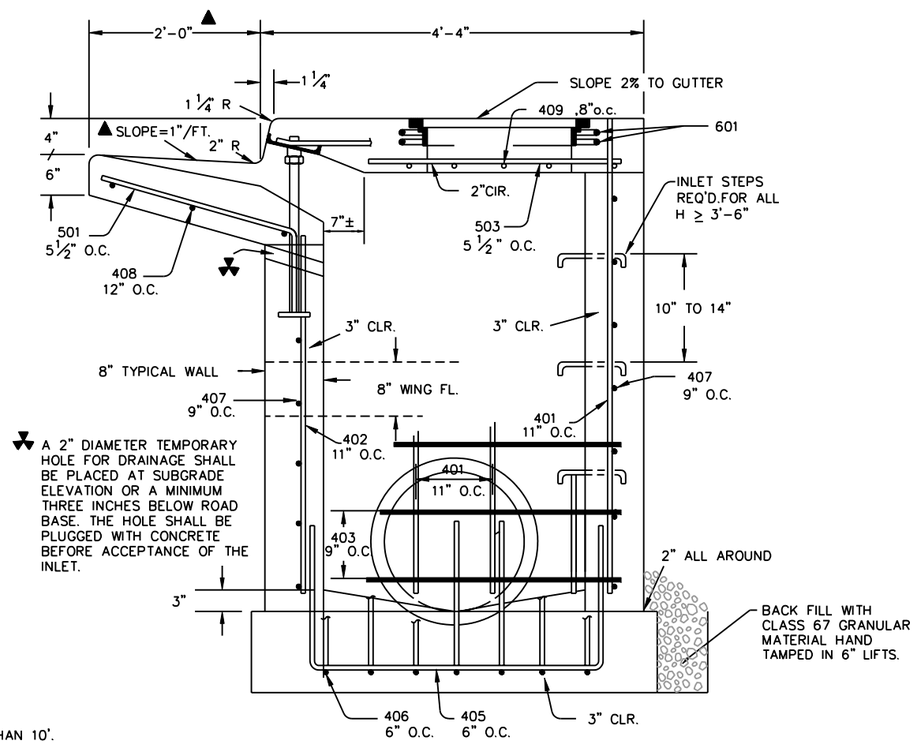

A 2" DIAMETER TEMPORARY HOLE FOR DRAINAGE SHALL BE PLACED AT SUBGRADE ELEVATION OR A MINIMUM THREE INCHES BELOW ROAD BASE. THE HOLE SHALL BE PLUGGED WITH CONCRETE BEFORE ACCEPTANCE OF THE INLET.

SECTION B–B
TYPICAL END VIEW

NOTE: MANHOLE RING & COVER, STATION POINT AND OUTFLOW PIPE SHALL BE LOCATED AT THE SAME END OF THE INLET.

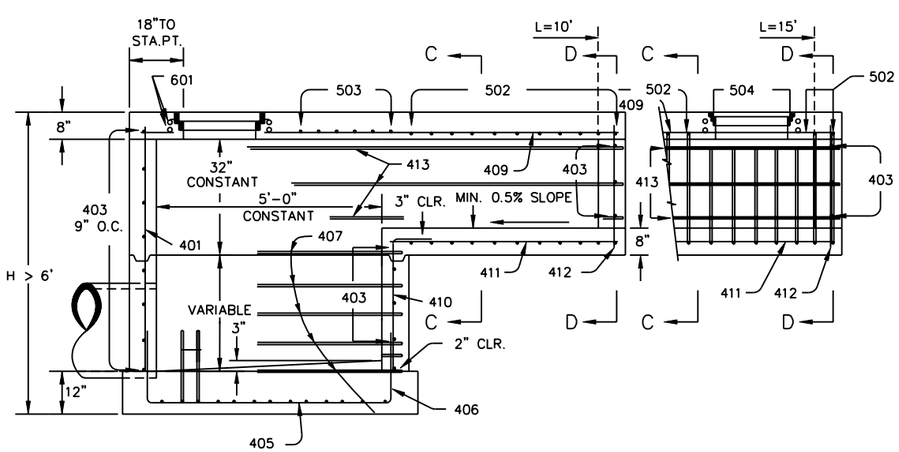

SECTION A–A INLET WITH DROP BOX~H>6'

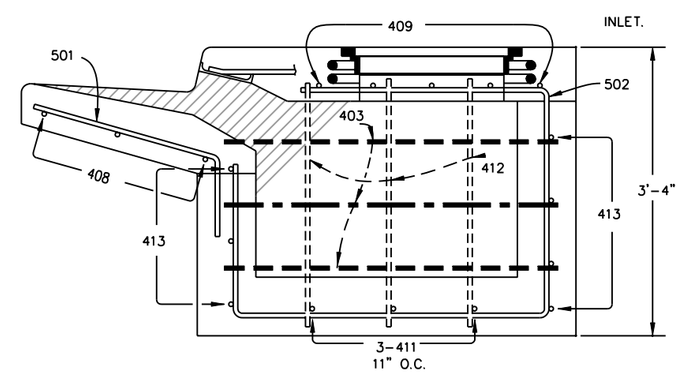

SECTIONS C–C & D–D
(DOTTED BARS ARE IN SECTION D–D)

CURB INLET TYPE R

CITY OF LOVELAND PUBLIC WORKS DEPT. STORMWATER	STORMWATER CONSTRUCTION DRAWINGS	APPROVED: KWG DATE: 8/17/07 DRAWN BY: TBK	DRAWING SW-5A